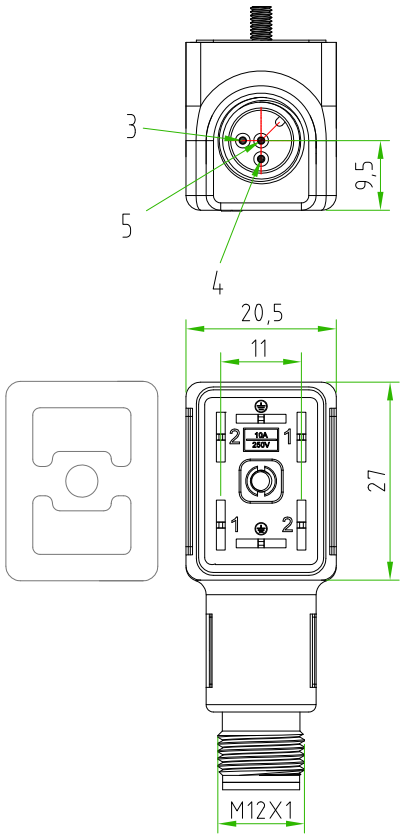

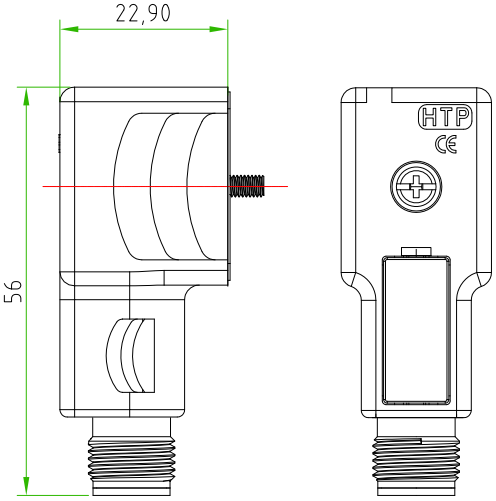

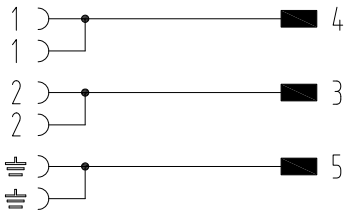

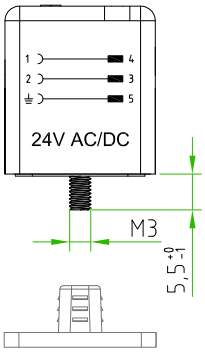

	PRODUCT TYPE	ADAPTER CONNECTOR EN175301-803 INDUSTRIAL STANDARD (TYPE B) + M12 CIRCULAR CONNECTOR
ADAPTER CONNECTOR FEATURES	CONNECTOR TYPE	RECTANGULAR CONNECTOR EN175301-803 INDUSTRIAL STANDARD (TYPE B)
	CONNECTOR COLOUR	BLACK
	CONTACTS SPACING	11mm
	NUMBER OF CONTACTS	2POLES+2EARTHS
	EARTH POSITIONING	H.6-12
	CENTRAL FIXING SCREW	M3X0,5 L=25mm
	GASKET TYPE	INTEGRATED (NBR)
	PROTECTION CLASS	IP67
	CIRCUIT TYPE	WITHOUT ELECTRONIC
	RATED VOLTAGE	1-230V AC/DC
	M12 CONNECTOR TYPE	STRAIGHT 180°
	M12 CONTACTS TYPE	MALE 3POLES
	M12 CONTACTS CONNECTED	N°3
	CONNECTOR WITH H.T.P.LOGO	

CUSTOMER APPROVAL	
SIGNATURE	DATE
PLEASE SIGN AND RETURN	

Rev.	Modify	Date	Signed	Approved

Rev.	Modify	Date	Signed	Approved

Rev.	Modify	Date	Signed	Approved

A4

Designer	CIMMINO L.	Date	2015-11-02	Tollerance	±0.1	Units:	mm	Series	ADAPTER	Drawing n. 1-1
Approved	MAZZOLA M.	Date	2015-11-02	Scale	1:1	Size:	A4	Customer code:		

HTP High Tech Products S.R.L.

DESCRIPTION

ADAPTER RECTANGULAR CONNECTOR EN175301-803 INDUSTRIAL STANDARD (type-B), 2P.+P.E.,11mm,BLACK,WITHOUT ELECTRONIC,+M12 CONNECTOR MALE 3POLES. CONNECTOR WITH H.T.P.LOGO

H.T.P.PART NUMBER

M1N02000C-12MD

H.T.P. High Tech Products S.R.L. Via Lesina,45 -24030- Brembate di Sopra (Bg) - ITALY Phone:+39.035692509 Fax:+39.035203291 E-mail: info@webhtp.eu Web: http://www.webhtp.eu/

ALL RIGHTS ARE RESERVED.