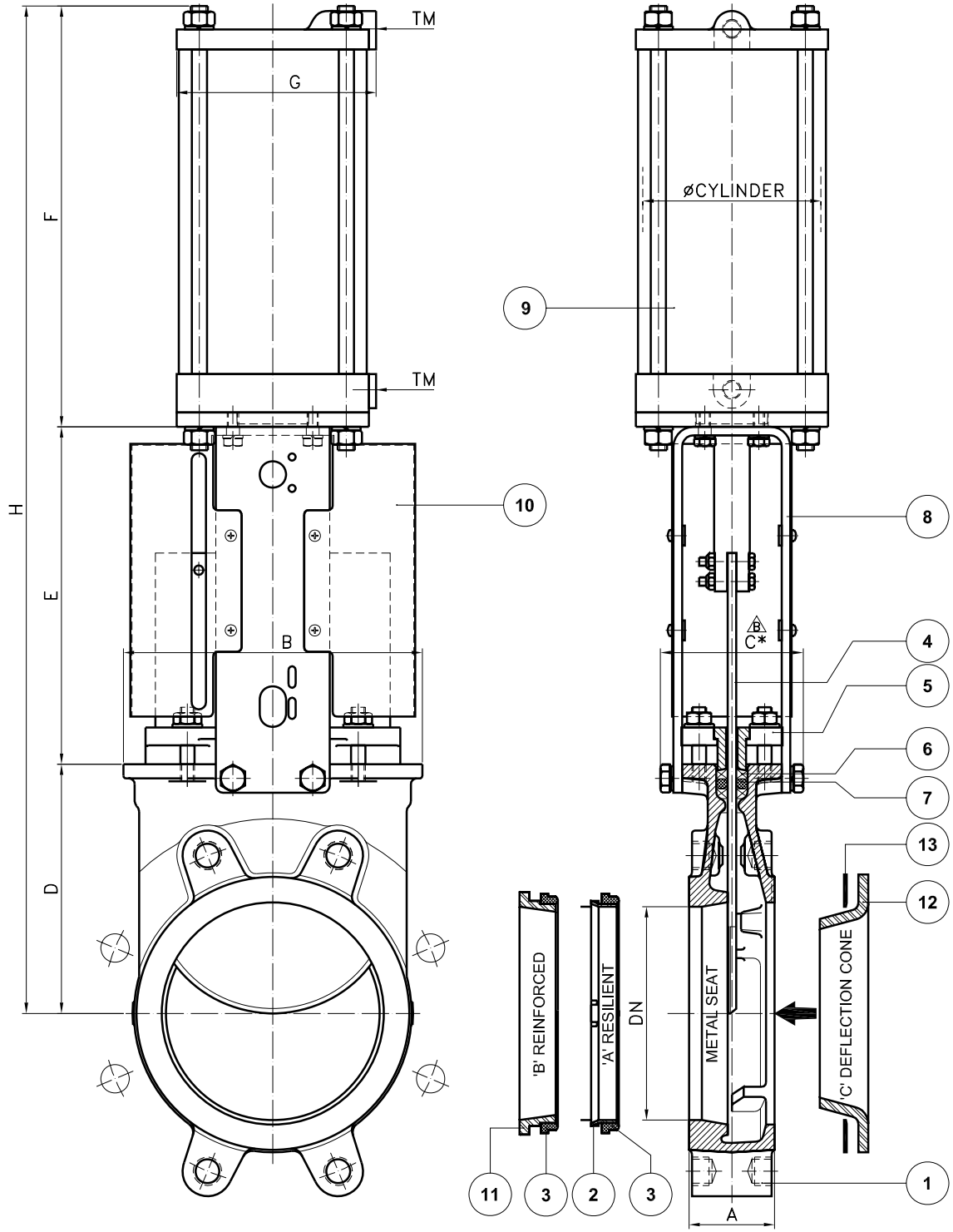

DN	øCYLINDERxSTROKE	TM(BSP)	A	B	C	D	E	F	G	H
50	100x62	1/4"	40	119	100	105	129	178	115	412
65	100x77	1/4"	40	134	100	115	146	193	115	454
80	100x95	1/4"	50	149	100	124	162	211	115	497
100	100x115	1/4"	50	169	100	140	187	231	115	558
125	125x143	1/4"	50	180	100	150	211	271	140	632
150	125x168	1/4"	60	210	100	175	237	296	140	708
200	160x220	1/4"	60	262	119	205	309	358	175	872
250	200x270	3/8"	70	318	122	250	364	428	220	1042
300	200x320	3/8"	70	372	122	300	414	478	220	1192
350	250x375	3/8"	96	431	197	338	500	549	277	1387
400	250x425	3/8"	100	486	197	392	550	599	277	1541
450	300x475	1/2"	106	540	270	432	598	680	382	1710
500	300x525	1/2"	110	602	270	485	658	730	382	1873
600	300x625	1/2"	110	708	270	590	758	830	382	2178

DIN PN10

DN	øK	n°	M	T	●	⊕
50	125	4	M16	11	4	*
65	145	4	M16	11	4	*
80	160	8	M16	11	4	4
100	180	8	M16	11	4	4
125	210	8	M16	11	4	4
150	240	8	M20	14	4	4
200	295	8	M20	14	4	4
250	350	12	M20	18	6	6
300	400	12	M20	18	6	6
350	460	16	M20	22	10	6
400	515	16	M24	24	10	6
450	565	20	M24	24	14	6
500	620	20	M24	24	14	6
600	725	20	M27	24	14	6

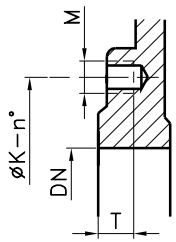

● BLIND TAPPED BOLT HOLES

⊕ THROUGH GOING BORE

△B * **MAXIMUM WIDE**

NUMBER	PART NAME	QUANTITY	MATERIAL
–	BOLTS&NUTS	–	STEEL 8.8
13	GASKET	1	COMPRESSED BOARD
12	DEFLECTION CONE	1	CF8M
11	REINFORCED SEAL RING	1	CF8M
10	GUARDS	2	AISI304
9	D/A PNEUMATIC CYLINDER	1	ORBINOX (SEE TABLE)
8	YOKE	1	CARBON STEEL
7	O–RING	–	EPDM
6	PACKING	–	TALLOWED COTTON
5	PACKING GLAND	1	ALUMINIUM/S.G.IRON (DN 350–600)
4	SLIDE	1	AISI304
3	SEAL	1	EPDM
2	SEAL RING	1	AISI316 (AISI304 DN 350–600)
1	BODY	1	GG25

Rev.	Modification	Date	Name
B	ADD COMMENTS	06-02-05	
C			
D			
E			
F			
G			

DRAWING Nº: EX9722B3

	DATE	NAME
TRACED BY	11-04-05	
CHECKED BY	11-04-05	
APPROVED BY	11-04-05	

SCALE:

Diskette

Designation: KNIFE GATE VALVE EX04

PN10 DN 50–600

ORBINOX

Datum and drawings without compromise. ORBINOX, S. A. reserves the right of modification at any time, at is own discretion and without previous notice.

DRAWING IN CAD SYSTEM. DO NOT MAKE ANY CORRECTION BY HAND.